	STRUCTURE	STATION	SPAN	UPRIGHT	CHORD	VERTICAL STRUT	VERTICAL DIAGONAL	HORIZ STRUT/DIAG	CAMBER	POST TILT	BOLTS @ CHORD	ANCHOR BOLTS QTY	ANCHOR BOLTS SIZE	ANCHOR BOLTS EMBED	GUSSET REQ'D	"A"	"B"	"C"	"D"	"F"	"G"	"H"	"K"	"L"	DESIGN SIGN AREA
1	OH-17	452+48.51(WB)	42'-9	30.000 x .375	3.500 x .188	1.315 x .133	1.660 x .140	1.660 x .140	5⅜	½	8	8	1¾	3'-6	8	19'-6	4'-0	3'-6	1¾	5/16	¼	4 – ¾	¾	¼	228.5

NOTE: ALL PIPE SIZES ARE OUTSIDE DIAMETER

The struts should be 1.660 x .140 and the diagonals 1.135 x .133 (they are reversed)

SCDOT
South Carolina Department of Transportation

ACCEPTED
X AS NOTED
REVIEWED BY: John Egan 8/20/24
DATE

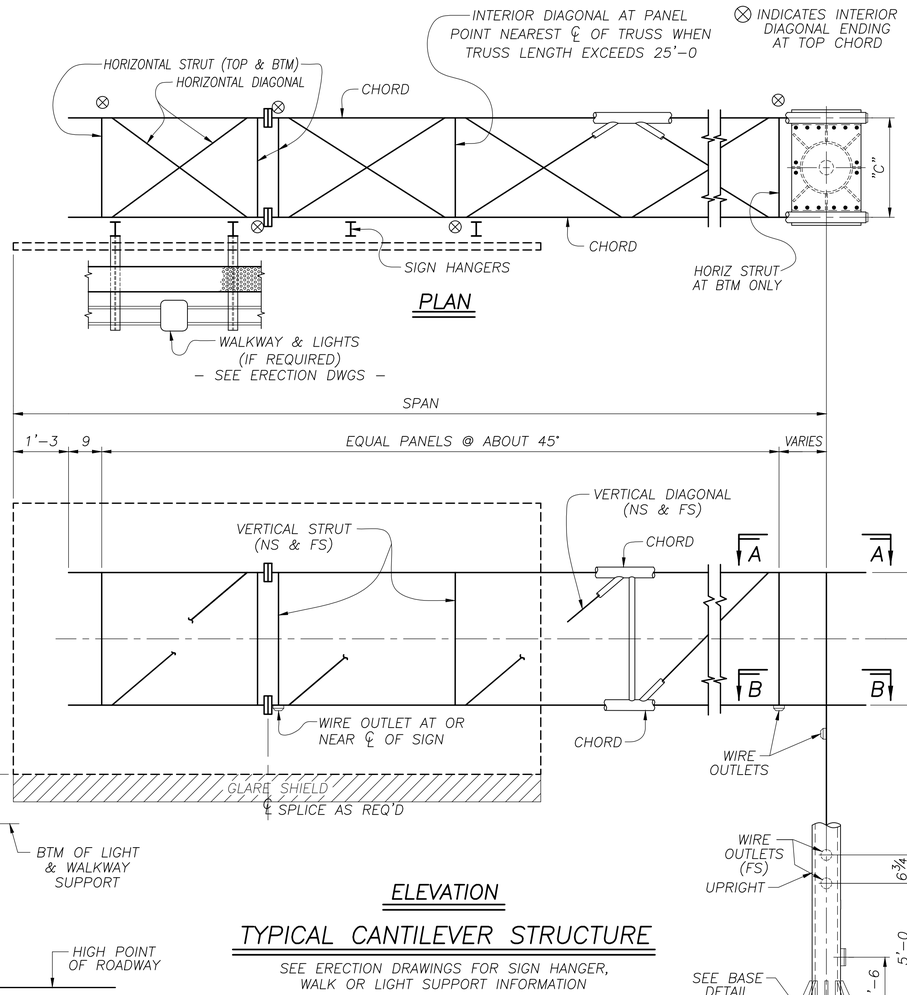

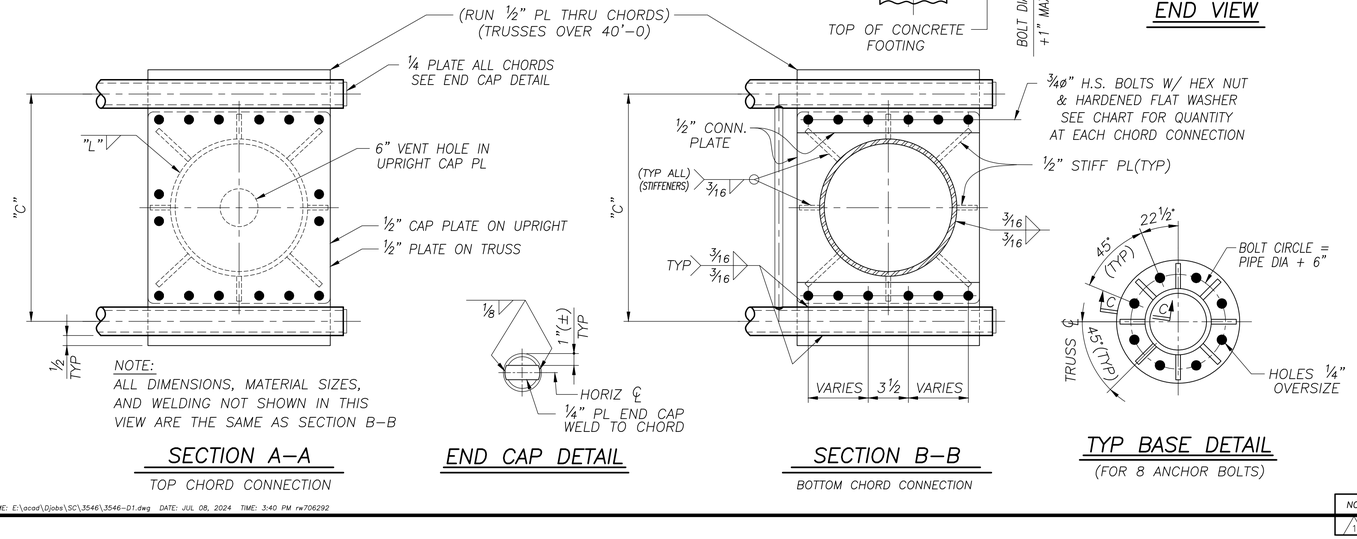

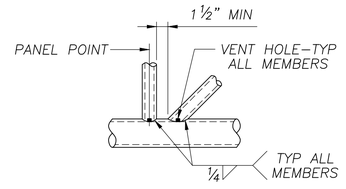

TYP DETAIL AT PANEL POINT

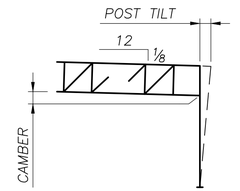

CAMBER DIAGRAM

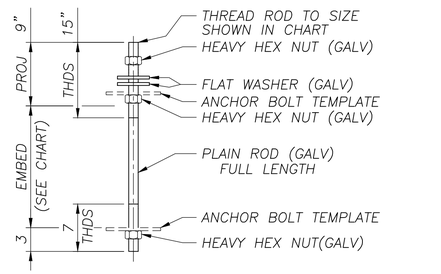

ANCHOR DETAIL

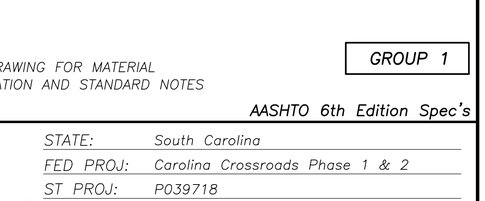

SPLICE DETAIL

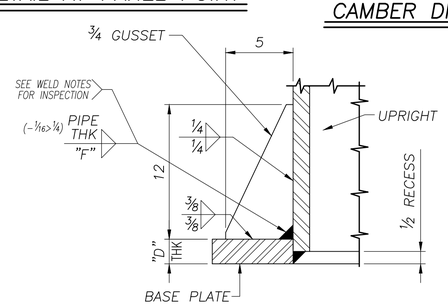

SECTION C-C

NOTE:
SEE GENERAL NOTES DRAWING FOR MATERIAL SPECIFICATIONS, FOUNDATION AND STANDARD NOTES

GROUP 1

AASHTO 6th Edition Spec's

SEALED BY:

SOUTH CAROLINA PROFESSIONAL ENGINEER Robert R Wigington No. 35290 ROBERT R WIGINGTON

Jul 9 2024

walpar
A valmont COMPANY

POST OFFICE BOX 28650
BIRMINGHAM ALABAMA 35228
4200 JEFFERSON AVENUE
BIRMINGHAM ALABAMA 35221
PHONE (205)-925-4990
FAX (205) 925-7273

1

STATE:	South Carolina
FED PROJ:	Carolina Crossroads Phase 1 & 2
ST PROJ:	P039718
COUNTY:	Lexington & Richland
ROUTE:	I-26 & I-126
SUBJECT:	BOX TRUSS CANTILEVER SIGN SUPPORTS
	WALPAR STANDARD DESIGN
FOR:	Archer-United Joint Venture
DRAWN BY:	IWL DATE: 7/19/23
CHECKED BY:	DAL DATE: 8/16/23
DWG NO:	C3546-D1

NO:	REVISIONS	DATE	MADE	CHECKED
1	REVISED SPAN LENGTH	7/8/24	IWL	RRW

BTCT-D

	STRUCTURE	STATION	"A"			"D"	BARS "E"	HOOPS "F" (SEE ✱ NOTE)			CONC/FTG (cu yds)	REINF/FTG (lbs)	"Z" @ ℄
1	OH–17	452+48.51(WB)	4'–6			17'–0	19 – #10 @ 7 3/16in.	19 – #5 @ 1'–0			10.01	1601	9"

PARALLEL TO TRAFFIC

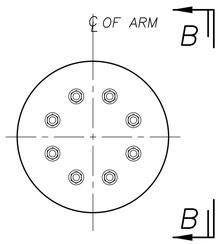

(8) ANCHOR BOLTS
(TYP)

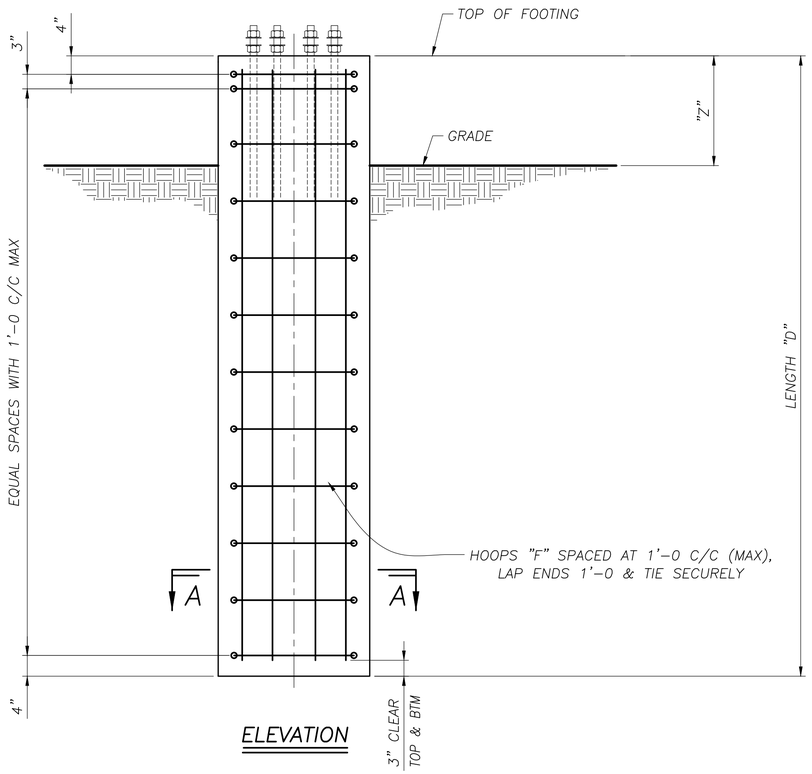

ELEVATION

SINGLE POLE FOOTING
(CANTILEVER/BUTTERFLY)

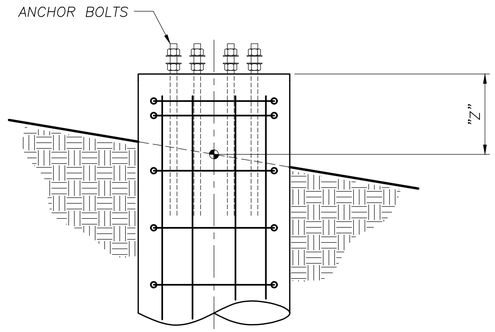

SECTION B–B

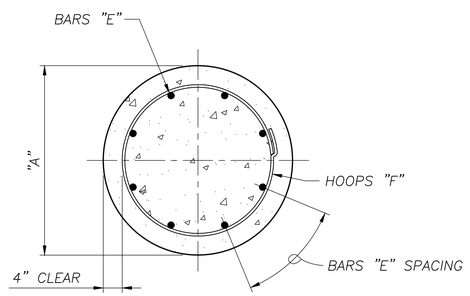

SECTION A–A

NOTE:
SEE GENERAL NOTES DRAWING FOR MATERIAL SPECIFICATIONS, FOUNDATION AND STANDARD NOTES

GROUP 1

AASHTO 6th Edition Spec's

SEALED BY:

SOUTH CAROLINA PROFESSIONAL ENGINEER
No. 35290
ROBERT R WIGINTON

Jul 9 2024

NO:	REVISIONS	DATE	MADE	CHECKED
1	REVISED SPAN LENGTH	7/8/24	IWL	RRW

walpar
A valmont COMPANY
POST OFFICE BOX 28650
BIRMINGHAM ALABAMA 35228
4200 JEFFERSON AVENUE
BIRMINGHAM ALABAMA 35221
PHONE (205)–925–4990
FAX (205) 925–7273

1

CCF–D

STATE:	South Carolina
FED PROJ:	Carolina Crossroads Phase 1 & 2
ST PROJ:	P039718
COUNTY:	Lexington & Richland
ROUTE:	I–26 & I–126
SUBJECT:	OVERHEAD SIGN SUPPORT
	CANTILEVER/BUTTERFLY CYLINDRICAL FOOTING DESIGN
FOR:	Archer–United Joint Venture
DRAWN BY:	IWL DATE: 7/19/23
CHECKED BY:	DAL DATE: 8/16/23
DWG NO:	C3546–D2

NAME: E:\acad\Djobs\SC\3546\3546–D2.dwg DATE: JUL 08, 2024 TIME: 3:43 PM rw706292

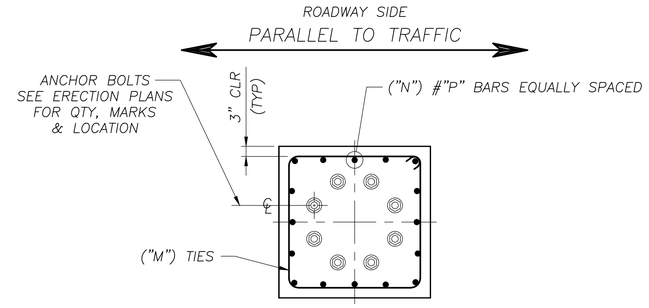

(8) ANCHOR BOLTS
(TYP)

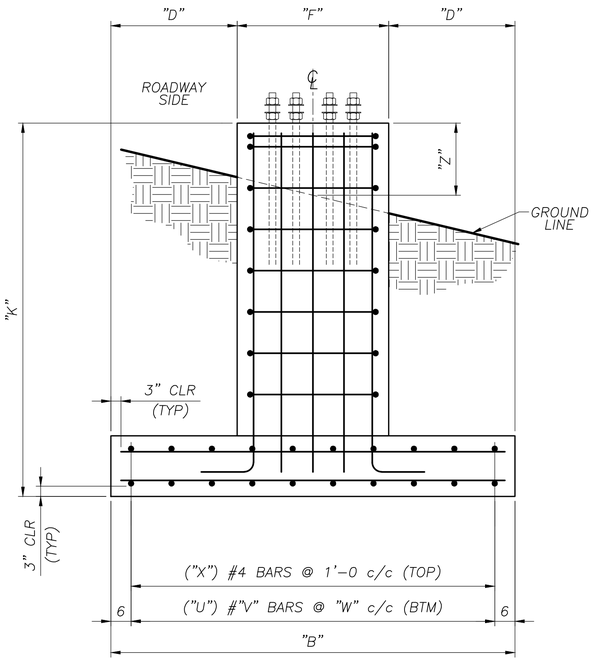

END VIEW

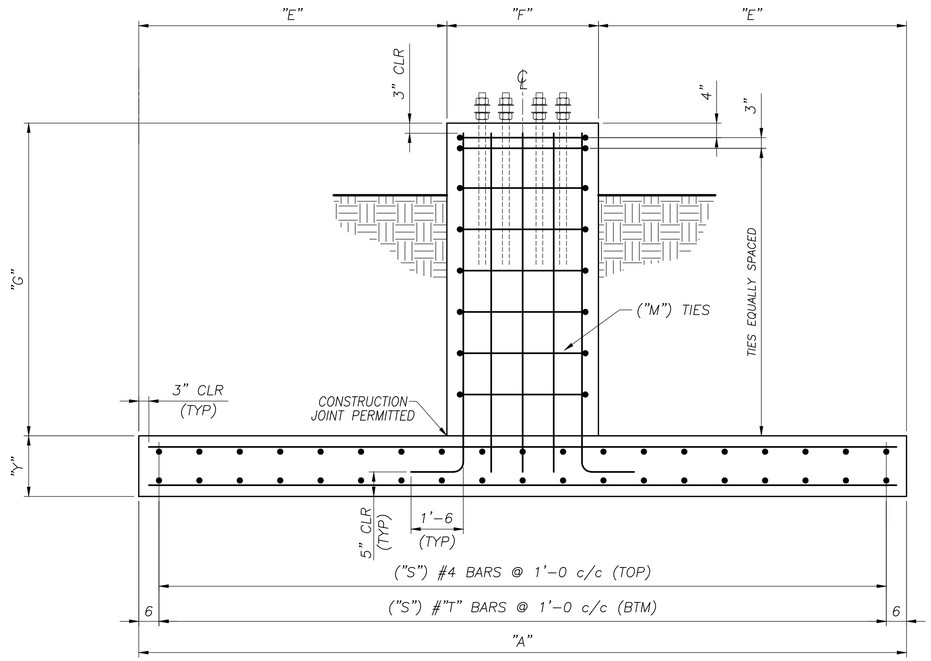

SIDE VIEW

STRUCTURE	STATION	"A"	"B"	"D"	"E"	"F"	"G"	"K"	"M"	"N"	"P"	"S"	"T"	"U"	"V"	"W"	"X"	"Y"	CONC/FTG (cu yds)	REINF/FTG (lbs)	"Z"
OH-17	452+48.51(WB)	21'-0	10'-0	2'-9	8'-3	4'-6	4'-0	5'-6	5-#5	40	8	21	4	10	6	1'-0	10	1'-6	14.67	1459	9"

1

NOTE:
SEE GENERAL NOTES DRAWING FOR MATERIAL SPECIFICATIONS, FOUNDATION AND STANDARD NOTES

GROUP 1

AASHTO 6th Edition Spec's

SEALED BY:

SOUTH CAROLINA PROFESSIONAL ENGINEER
Robert R Wigington
No. 35290
ROBERT R WIGINGTON

Jul 9 2024

walpar
A valmont COMPANY
POST OFFICE BOX 28650
BIRMINGHAM ALABAMA 35228
4200 JEFFERSON AVENUE
BIRMINGHAM ALABAMA 35221
PHONE (205)-925-4990
FAX (205) 925-7273

1

NO:	REVISIONS	DATE	MADE	CHECKED
1	REVISED SPAN LENGTH	7/8/24	IWL	RRW

STATE: South Carolina
FED PROJ: Carolina Crossroads Phase 1 & 2
ST PROJ: P039718
COUNTY: Lexington & Richland
ROUTE: I-26 & I-126

SUBJECT: OVERHEAD SIGN SUPPORT
SINGLE POLE SPREAD FOOTING DESIGN
FOR: Archer-United Joint Venture

DRAWN BY: IWL DATE: 7/19/23
CHECKED BY: DAL DATE: 9/8/23
DWG NO: C3546-D3

SP-SF-D

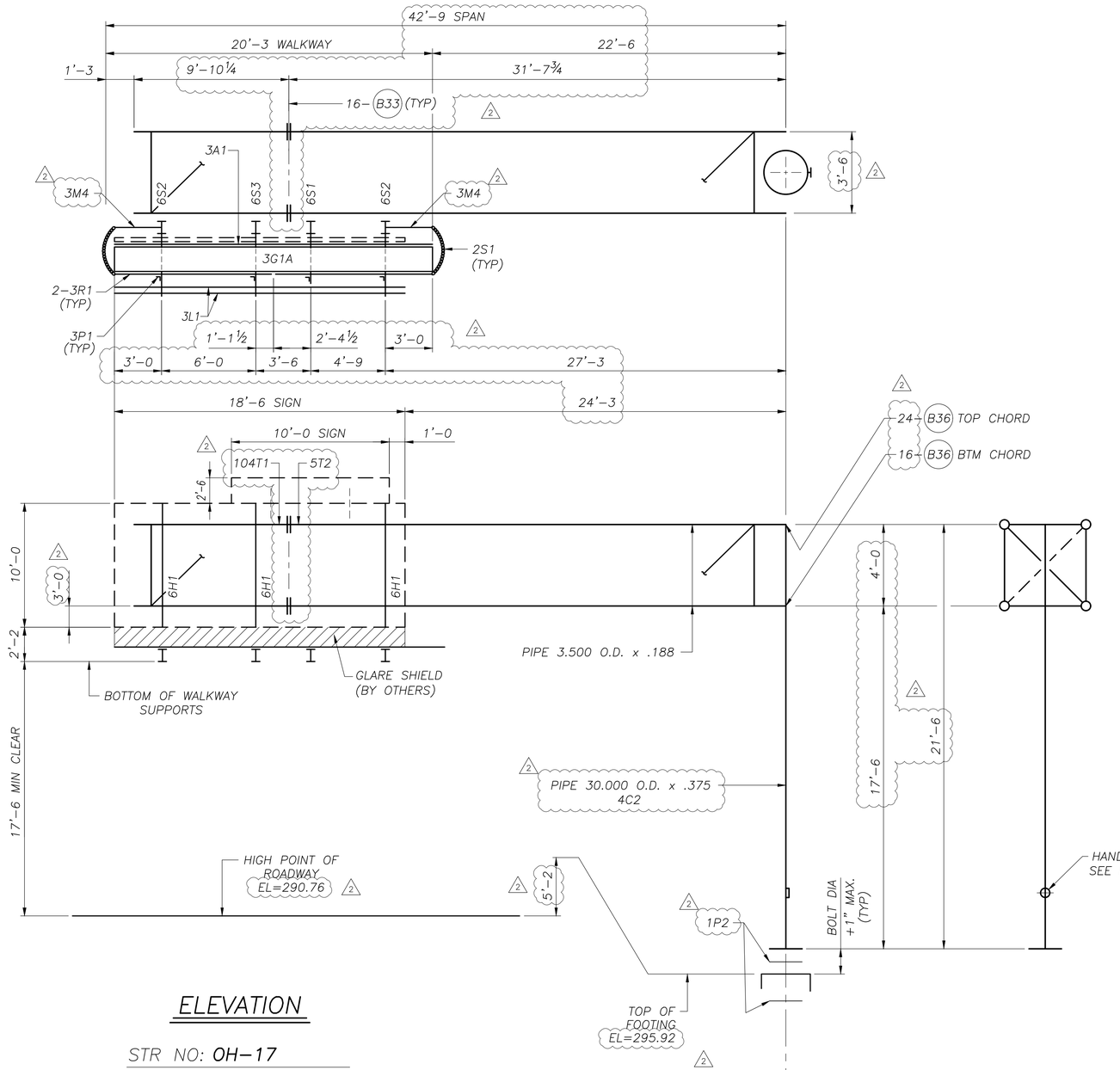

ELEVATION

STR NO: **OH-17**

STA NO: **452+48.51(WB)**

(LOOKING IN DIRECTION OF TRAFFIC FLOW)

NOTE: STRUCTURE SHALL NOT BE ERECTED WITHOUT SIGNS, SIGN HGR'S OR A SUITABLE VIBRATION DAMPER

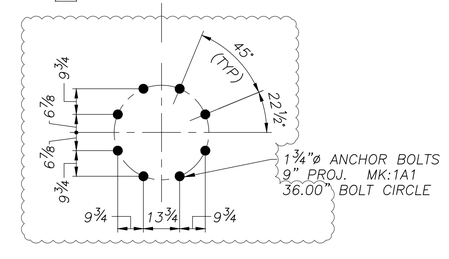

ANCHOR BOLT PLAN

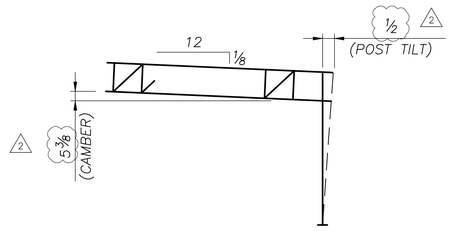

CAMBER DIAGRAM

ERECTION NOTE

1) TILT POST AWAY FROM ROADWAY AT ERECTION BY ADJUSTING LEVELING NUTS.
2) 1" MINIMUM PERMANENT CAMBER AFTER DEFLECTION.

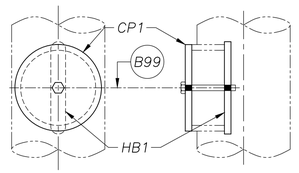

HANDHOLE DETAIL

PRE ASSEMBLE CP1 TO HB1 WITH B99 BOLT. DISTURB THREADS SO HB1 CAN NOT BE REMOVED. INSTALL COVER ASSEMBLY INTO HANDHOLE OPENING AND TIGHTEN BOLT TO SECURE.

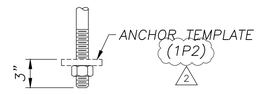

ANCHOR DETAIL

(TYPICAL)

PREVIOUSLY SHIPPED

SHIPPING LIST		C3546-E1
QTY	MARK	DESCRIPTION
6	1A1	ANCHOR BOLTS
2	1P1	DISCARD (NOT USED) ANCHOR TEMPLATES
2	1A1	ANCHOR BOLTS
2	1P2	ANCHOR TEMPLATES
1	5T2	CANTILEVER TRUSS 4.3' x 4.8' x 33.3'
1	104T1	CANTILEVER TRUSS 4.3' x 4.8' x 9.9'
1	4C2	CANTILEVER POST 3.4' x 3.4' x 21.5'
1	6S1	WALK SUPPORT
2	6S2	SIGN/WALK/LIGHT SUPPORTS
1	6S3	SIGN/WALK/LIGHT SUPPORTS
2	3M4	SAFETY CHAIN SUPPORT
2	2S1	SAFETY CHAIN
4	2P1	HINGE PIN ASSEMBLIES
8	3M1	CLAMP PLATES
4	3P1	HANDRAIL POSTS
4	3R1	HANDRAILS
1	3G1A	GRATING
3	6H1	SIGN HANGERS (ANGLE ARM)
3	2M1	EYEBOLT ASSEMBLIES
1	3A1	SAFETY ANGLE
2	3L1	LIGHTING SUPPORTS
1	CP1	COVER PLATE ASSEMBLY
1	HB1	HANDHOLE BAR
18	B1	3/8" x 1 1/4" BOLT w/HN/LW (A307 GALV)
8	B3	1 3/8" OD x 14 GA WASHER (A307 GALV)
3	B4	3/4" x 2 1/2" HHB w/HN/FW/LW (A325 GALV)
3	B5	3/4" x 2" HHB w/HN/LW (A325 GALV)
4	B6	1/2" x 1 1/2" HHB w/HN/LW (A325 GALV)
16	B33	3/4" x 3" HHB w/HN/FW/DTI (A325 GALV)
40	B36	3/4" x 2 1/2" HHB w/HN/FW/DTI (A325 GALV)
1	B99	1/4" x 4" HHB (A307 GALV)
8	U1	5/16" U-Bolts w/(2 ea) HN/LW (ZINC PL)
16	U3	1/2" U-Bolts w/(2 ea) HN/LW/FW (GALV)

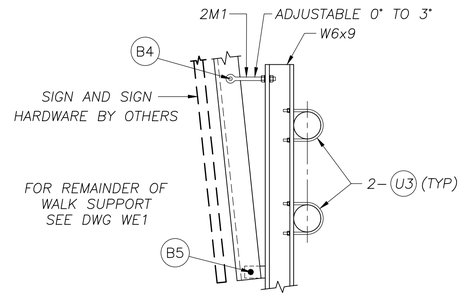

TYP SECTION THRU SIGN SUPPORT & SIGN HANGER

NOTE: EXIT PANELS & SUPPORTS BY OTHERS

NOTE:

SEE GENERAL NOTES DRAWING FOR MATERIAL SPECIFICATIONS, FOUNDATION AND STANDARD NOTES

OH-17

DESIGN DWGS: D1 – D3 DESIGN NO: BC1 AASHTO 6th Edition Spec's

SEALED BY:

SOUTH CAROLINA PROFESSIONAL ENGINEER ROBERT R WIGHTON No. 35290

Jul 9 2024

NO:	REVISIONS	DATE	MADE	CHECKED
2	REVISED SPAN LENGTH & UPRIGHT HEIGHT	7/3/24	DLK	JSD

walpar
A valmont COMPANY
POST OFFICE BOX 28650
BIRMINGHAM ALABAMA 35228
4200 JEFFERSON AVENUE
BIRMINGHAM ALABAMA 35221
PHONE (205)-925-4990
FAX (205) 925-7273

STATE:	South Carolina
FED PROJ:	Carolina Crossroads Phase 1 & 2
ST PROJ:	P039718
COUNTY:	Lexington & Richland
ROUTE:	I-26 & I-126
SUBJECT:	CANTILEVER SIGN SUPPORT ERECTION DRAWING
FOR:	Archer-United Joint Venture
DRAWN BY:	DLK DATE: 8/23/23
CHECKED BY:	DLJ DATE: 8/31/23
DWG NO:	C3546-E1

CANT-E

NAME: E:\acad\JobsNPrg\3546\3546-E1.dwg DATE: JUL 03, 2024 TIME: 9:55 AM jd706288

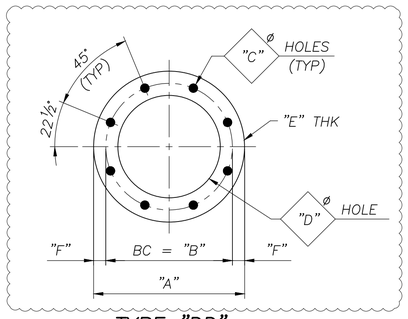

TYPE "DD"
(SEE CHART FOR INFORMATION)

ANCHOR TEMPLATE CHART

(ALL DIMENSIONS IN INCHES)

MARK	QTY	TYPE	"A"	"B"	"C"	"D"	"E"	"F"
1P2	2	DD	40	36	1⅞	32	¼	2

1

NOTE:

THREADS (ROLLED OR CUT) FOR "H" NUT

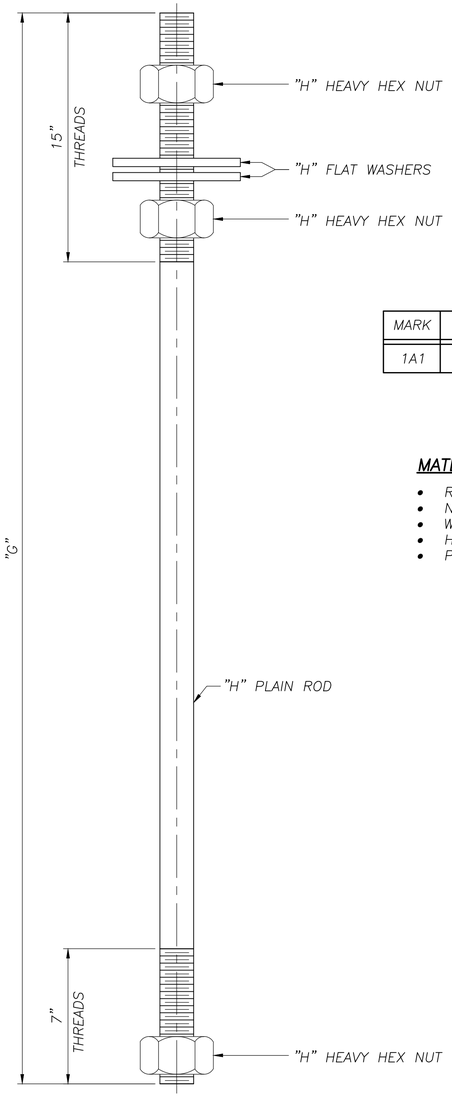

~ ANCHOR BOLTS ~

MARK	"G"	"H"ø	(TPI)	ROD QTY	NUT QTY	FW QTY	
1A1	4'-6	1¾	5	8	24	16	

1

MATERIAL SPECS:

- RODS – ASTM F1554, GRADE 55, S1
- NUTS – ASTM A563,GR.DH OR ASTM A194,GR.2H
- WASHERS – ASTM F436
- HARDWARE – GALV PER ASTM-A153
- PLAIN ROD – GALV FULL LENGTH PER ASTM-A153

PARTS PER CONT	PART MARK NO	NO OF PIECES REQ'D	SECTION SYM	DESCRIPTION OF MATERIAL	LENGTH FEET	LENGTH INCHES	PARTS FOR ONE UNIT	
	1P2	2		ANCHOR TEMPLATES				
1	a	2	PL	¼ x 40 DIA	–	–		

SHIPPING LIST		
QTY	MARK	DESCRIPTION
2	1P2	ANCHOR TEMPLATES
1 8	1A1	ANCHOR BOLTS

NOTE: SHOP SHIP FROM THIS DRAWING

NOTE:
DO NOT GALVANIZE TEMPLATES

NOTE:
SEE GENERAL NOTES DRAWING FOR MATERIAL SPECIFICATIONS, FOUNDATION AND STANDARD NOTES

REF DWG: E1

OH-17

AASHTO 6th Edition Spec's

SEALED BY:

SOUTH CAROLINA PROFESSIONAL ENGINEER ROBERT R WIGINTON No. 35290

Jul 9 2024

NO:	REVISIONS	DATE	MADE	CHECKED
1	REVISED PER SPAN CHANGES	7/3/24	DLK	JSD

walpar
A valmont COMPANY
POST OFFICE BOX 28650
BIRMINGHAM ALABAMA 35228
4200 JEFFERSON AVENUE
BIRMINGHAM ALABAMA 35221
PHONE (205)-925-4990
FAX (205) 925-7273

STATE:	South Carolina
FED PROJ:	Carolina Crossroads Phase 1 & 2
ST PROJ:	P039718
COUNTY:	Lexington & Richland
ROUTE:	I-26 & I-126
SUBJECT:	SIGN STRUCTURE ANCHOR BOLT & TEMPLATE DETAILS
FOR:	Archer-United Joint Venture
DRAWN BY:	DLK DATE: 8/23/23
CHECKED BY:	DLJ DATE: 8/24/23
DWG NO:	C3546-1

1

C3546-2
SOUTH CAROLINA

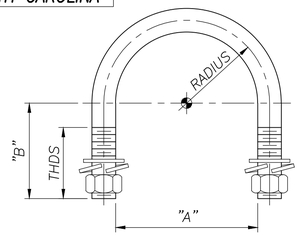

NOTE 1:
- UBOLT MATERIAL PROPERTIES TO MEET OR EXCEED A307
- GALV PER A153

NOTE 2:
- UBOLT MATERIAL PROPERTIES TO MEET OR EXCEED A307
- ZINC PL PER B633

~ U-BOLTS w/(2ea) HN/LW/FW ~

NUTS: ASTM A563,GR.DH OR ASTM A194,GR.2H
WASHERS: ASTM F436 & ANSI-B18.21.1

MARK	QTY	DIA	"A"	"B"	RADIUS	THDS	MATERIAL
U1	8	5/16	1 11/16	1 5/8	1	1 1/4	NOTE 2
U3	16	1/2	3 5/8	3 3/4	2 1/16	2	NOTE 1

1

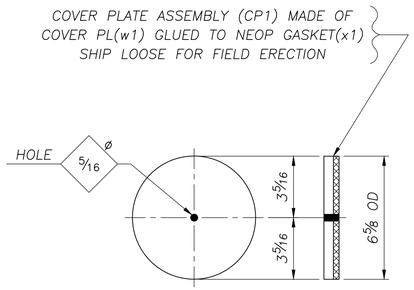

1 ~ COVER PLATE ASSEMBLY ~ CP1

PART MARK NO.	NO. OF PIECES REQ'D	SECTION SYM	DESCRIPTION OF MATERIAL	LENGTH FEET	LENGTH INCHES	PARTS FOR ONE UNIT
CP1	1		COVER PLATE ASSEMBLY			
w1	1	PL	1/4 x 6 5/8 DIA. (GALV A123)	–	–	1
x1	1	OP	1/8 x 6 5/8 DIA. (NEOP GASKET)	–	–	1

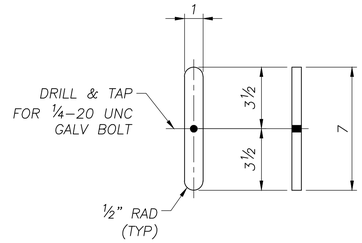

1 ~ HANDHOLE BAR ~ HB1

PART MARK NO.	NO. OF PIECES REQ'D	SECTION SYM	DESCRIPTION OF MATERIAL	LENGTH FEET	LENGTH INCHES	PARTS FOR ONE UNIT
HB1	1		HANDHOLE BAR			
w2	1	PL	1/4 x 1 (GALV A123)	0	7	1

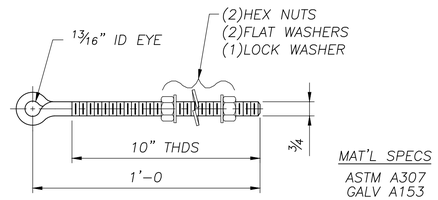

MAT'L SPECS
ASTM A307
GALV A153

3 ~ EYE BOLT ASSEMBLY ~ 2M1

NUTS: ASTM A563,GR.DH OR ASTM A194,GR.2H
WASHERS: ASTM F436 & ANSI-B18.21.1

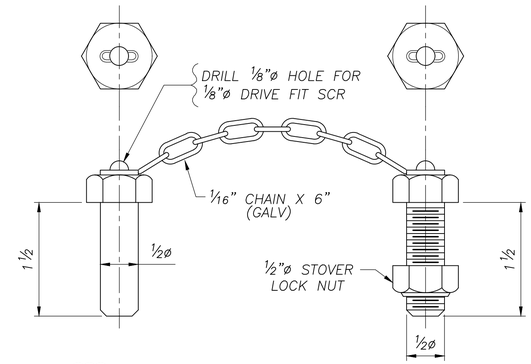

1 4 ~ HINGE PIN ASSEMBLY ~ 2P1

MAT'L SPECS: ASTM A307 (ZINC PL UN)

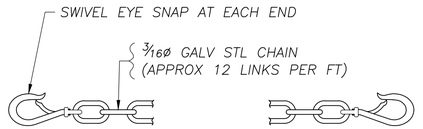

~ SAFETY CHAIN ~

MARK	QTY	LENGTH
2S1	2	4'-6

NOTE:
SEE GENERAL NOTES DRAWING FOR MATERIAL SPECIFICATIONS, FOUNDATION AND STANDARD NOTES

REF DWGS: E1

OH-17

AASHTO 6th Edition Spec's

SEALED BY:



Jul 9 2024

walpar
A valmont COMPANY

POST OFFICE BOX 28650
BIRMINGHAM ALABAMA 35228
4200 JEFFERSON AVENUE
BIRMINGHAM ALABAMA 35221
PHONE (205)-925-4990
FAX (205) 925-7273

1

STATE: South Carolina
FED PROJ: Carolina Crossroads Phase 1 & 2
ST PROJ: P039718
COUNTY: Lexington & Richland
ROUTE: I-26 & I-126

SUBJECT: SIGN STRUCTURES
MISC DETAILS
FOR: Archer-United Joint Venture

DRAWN BY: DLK DATE: 8/23/23
CHECKED BY: DLJ DATE: 8/24/23
DWG NO: C3546-2

NO:	REVISIONS	DATE	MADE	CHECKED
1	QUANTITIES REVISED	7/8/24	DLK	JSD

KITDWG3

NAME: E:\acad\JobsNPrg\3546\3546-2.dwg DATE: JUL 08, 2024 TIME: 4:16 PM jd706288

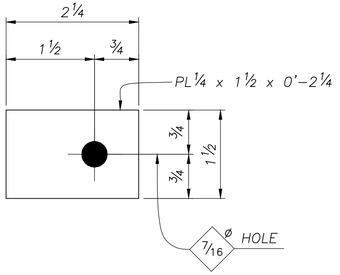

8 ~ CLAMP PLATES ~ 3M1

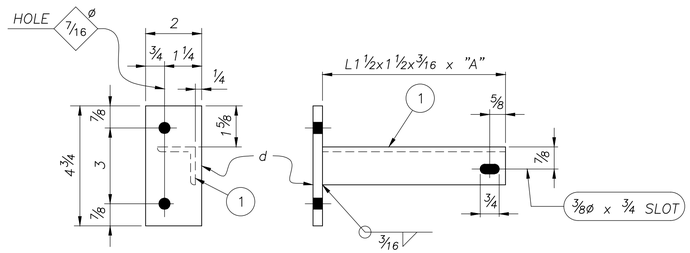

~ SAFETY CHAIN SUPPORT ~

(SEE CHART)

MARK	QTY	"A"	(1)
3M4	2	3'-0	af

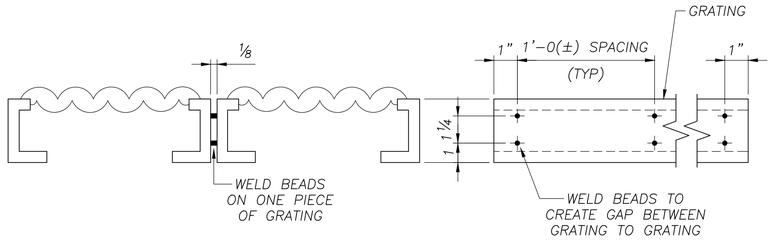

GRATING GAP DETAIL

PARTS PER CONT	PART MARK NO	NO OF PIECES REQ'D	SECTION SYM	DESCRIPTION OF MATERIAL	LENGTH FEET	LENGTH INCHES	PARTS FOR ONE UNIT	
	3M1	8		CLAMP PLATES				
	a	8	PL	¼ x 1½	0	2¼		
	3M4	2		SAFETY CHAIN SUPPORT				
3	d	2	PL	¼ x 2	0	4¾		
	af	2	L	1½ x 1½ x 3/16	3	0		
	3G1A	1		GRATING				
	g	1	GRT	18¾ WIDE	20	3		
	n	1	GRT	11¾ WIDE	20	3		
	3P1	4		HANDRAIL POSTS				
	h	4	ALL	2½ x 1½ x 3/16 (ALUM 6061)	3	8½		
	3R1	4		HANDRAIL				
	k	4	ALPI	1.660 x .140 (ALUM 6061)	10	1½		
	3A1	1		SAFETY ANGLE				
	m	1	L	4 x 3 x ¼	20	3		
	3L1	2		LIGHTING SUPPORTS (ALUM 6063-T6)				
	p	2	ALUN	UNISTRUT 1⅝ x 1⅝ x .105	18	6		

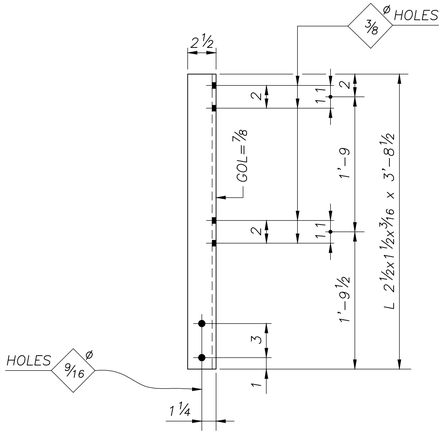

4 ~ HANDRAIL POSTS ~ 3P1

(ALUMINUM)

SHOP NOTE:

GRATING TO BE "GRIP STRUT", OR EQUAL SAFETY GRATING 3" DEEP, FORMED FROM 12 GA SHEETS GALV AFTER FAB WELDED TOGETHER IN A COMBINATION OF THESE SIZES
(1) #8 DIAMOND 18¾" WIDE – CAT# 83012 AND
(1) #5 DIAMOND 11¾" WIDE – CAT# 53012

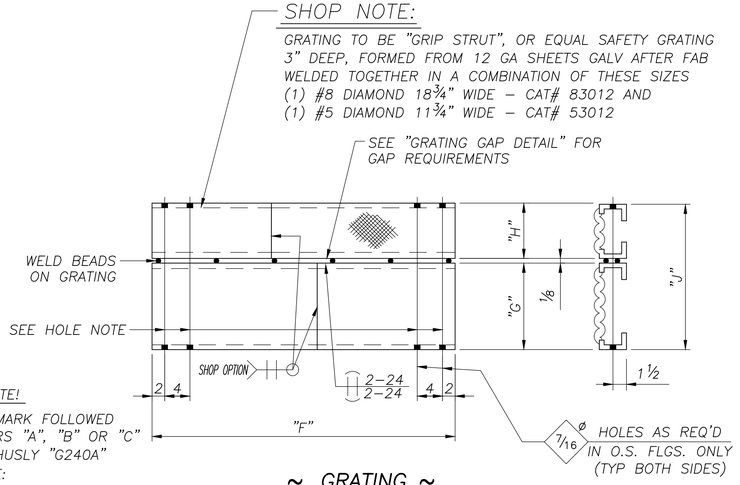

HOLE NOTE!

GRATING MARK FOLLOWED BY LETTERS "A", "B" OR "C" SHOWN THUSLY "G240A"
DESIGNATE:
"A" – NO HOLES
"B" – HOLES 1-END
"C" – HOLES BOTH ENDS

~ GRATING ~

(SEE CHART)

MARK	QTY	"F"	"G"	"H"	"J"
3G1A	1	20'-3	1'-6¾	11¾	2'-6⅝

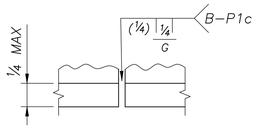

TOE ANGLE SPLICE

(OPTIONAL)

NOTE:

SEE GENERAL NOTES DRAWING FOR MATERIAL SPECIFICATIONS, FOUNDATION AND STANDARD NOTES

REF DWG: E1

OH-17

AASHTO 6th Edition Spec's

SEALED BY:



Jul 9 2024

walpar
A valmont COMPANY
POST OFFICE BOX 28650
BIRMINGHAM ALABAMA 35228
4200 JEFFERSON AVENUE
BIRMINGHAM ALABAMA 35221
PHONE (205)-925-4990
FAX (205) 925-7273

STATE:	South Carolina
FED PROJ:	Carolina Crossroads Phase 1 & 2
ST PROJ:	P039718
COUNTY:	Lexington & Richland
ROUTE:	I-26 & I-126

SUBJECT: SIGN STRUCTURE
MISC DETAILS

FOR: Archer-United Joint Venture

DRAWN BY: DLK DATE: 8/23/23
CHECKED BY: DLJ DATE: 8/28/23
DWG NO: C3546-3

NO:	REVISIONS	DATE	MADE	CHECKED
3	REVISED PER SPAN CHANGE	7/3/24	DLK	JSD

3

WalkWayDetails

MARK	QTY	"A"	"B"	"C"	"D"	"E"	"F"	"G"	"H"
4C2	1	21'–5¾	17'–5¾	4'–0	3'–0	1'–3½	3 @ 5 = 1'–3	1'–5¼	3 @ 5 = 1'–3

MARK	"J"	"K"	"L"	"M"	"N" QTY	"N" DIA	"P"	"S"	"T"	1	2	3	4	5	6	7	8
4C2	2½	2 15/16	7½	5/16	8	2	2½	2'–6 1/16	¼	a	b	d	f	k	m	n	h

PARTS PER CONT	PART MARK NO.	NO. OF PIECES REQ'D	SECTION SYM	DESCRIPTION OF MATERIAL	LENGTH FEET	LENGTH INCHES	PARTS FOR ONE UNIT
	4C2	1		CANTILEVER POST			
1	a	1	PIPE	30.000 x .375	21	4 15/16	
	b	1	PL	1¾ x 41 DIA	–	–	
	d	1	PL	½ x 36	3	1	
	f	1	PL	½ x 36	3	1	
	k	4	PL	½ x 2½	0	2½	
	m	4	PL	½ x 2 15/16	0	2 15/16	
1	n	8	PL	½ x 7½	0	7½	
	h	8	PL	¾ x 5	1	0	
	v1	1	PIPE	6.625 x .864	0	3	
	z1	3	OP	1¼" FORGED HALF CPLG (3000#)	–	–	

C3546–4

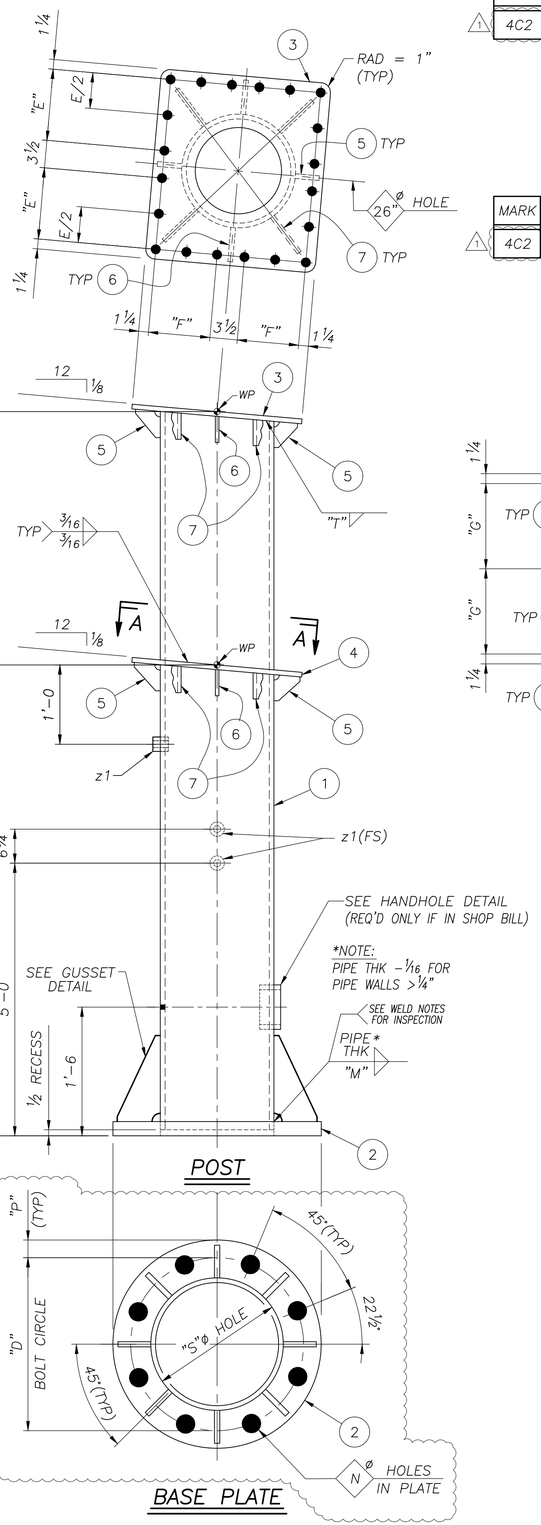

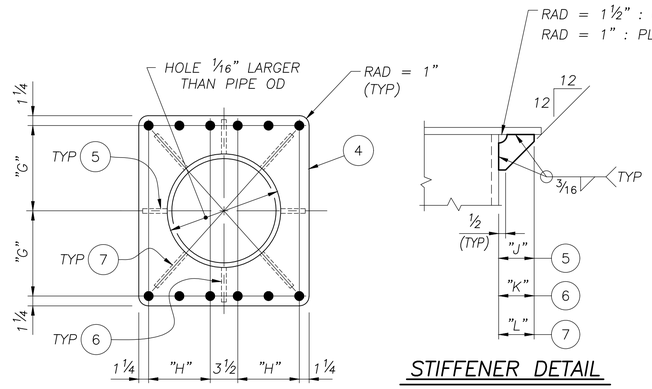

STIFFENER DETAIL

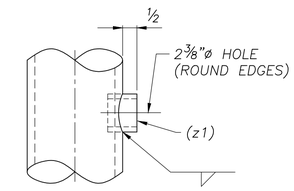

WIRE OUTLET DETAIL

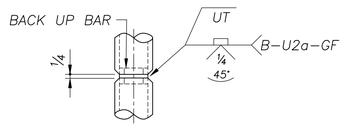

OPTIONAL SPLICE

(FOR WALL THK 5/16" OR GREATER ONLY)

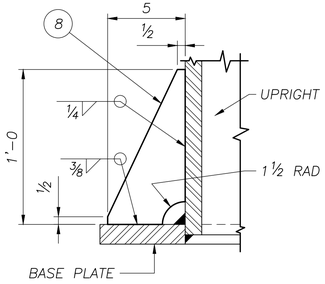

TYP GUSSET DETAIL

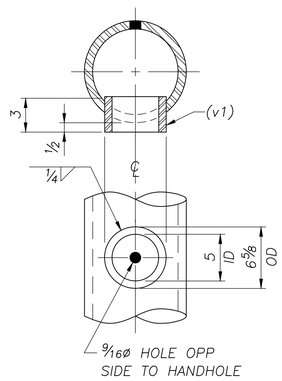

HANDHOLE DETAIL

NOTE:

ALL HOLES TO BE 7/8 ø UNLESS NOTED

NOTE:

SEE GENERAL NOTES DRAWING FOR MATERIAL SPECIFICATIONS, FOUNDATION AND STANDARD NOTES

REF DWG: E1

OH–17

AASHTO 6th Edition Spec's

SEALED BY:

SOUTH CAROLINA PROFESSIONAL ENGINEER ROBERT R WIGINTON No. 35290

Jul 9 2024

NO:	REVISIONS	DATE	MADE	CHECKED
1	REVISED PER SPAN CHANGE	7/3/24	DLK	JSD

walpar
A valmont COMPANY
POST OFFICE BOX 28650
BIRMINGHAM ALABAMA 35228
4200 JEFFERSON AVENUE
BIRMINGHAM ALABAMA 35221
PHONE (205)–925–4990
FAX (205) 925–7273

STATE:	South Carolina
FED PROJ:	Carolina Crossroads Phase 1 & 2
ST PROJ:	P039718
COUNTY:	Lexington & Richland
ROUTE:	I–26 & I–126
SUBJECT:	CANTILEVER SIGN SUPPORT DETAILS OF UPRIGHT
FOR:	Archer–United Joint Venture
DRAWN BY:	DLK DATE: 8/23/23
CHECKED BY:	DLJ DATE: 8/24/23
DWG NO:	C3546–4

CBTUPDET

NAME: E:\acad\JobsNProg\3546\3546–4.dwg DATE: JUL 03, 2024 TIME: 10:17 AM jd706288

MARK	QTY	"A"	"C"	PANELS	"D"	"E"	"F"	"G"	"H"	"J"	"K"	"L"	"M"	"N"	"P"	"W"	"X"	"Y"	"Z"
5T2	1	33'–3½	4'–0	7 @ 4'–2⅛(±) = 29'–3	3'–6	1'–3½	3 @ 5 = 1'–3	2'–10½	3 @ 5 = 1'–3	13'–3 7/16	3'–3½	3¾	1½	2½	3½	¼	⅞	6½	4

MARK	"R"	"S"	"T"	"V"	1	2	3	4	5	6	7	8	9	10	11
5T2	3'–9½	-------	-------	-------	a	b	d	f	g	h	k	m	n	p	z1

VENT HOLE SIZES	
WEB MEMBER (OD)	HOLE DIA ± ¼"
< 3.500	¾
3.500	1¾
4.000	2
4.500	2¼
5.563	2¾
6.625	3¼

PARTS PER CONT	PART MARK NO.	NO OF PIECES REQ'D	SECTION SYM	DESCRIPTION OF MATERIAL	LENGTH FEET	LENGTH INCHES	PARTS FOR ONE UNIT
1	5T2	1		CANTILEVER TRUSS			
	a	4	PIPE	3.500 x .188	33	3⅛	
	b	16	PIPE	1.660 x .140	3	8 13/16	
	d	14	PIPE	1.315 x .133	5	3⅜	
	f	3	PIPE	1.660 x .140	3	2 13/16	
	g	14	PIPE	1.660 x .140	4	11 9/16	
	h	4	PIPE	1.900 x .145	5	0 1/16	
	k	1	PL	½ x 36	3	10½	
	m	2	PL	½ x 7¼	3	0	
	n	4	PL	¼ x 1½	0	3¼	
	p	4	PL	¾ x 9½ DIA.	–	–	
1	z1	1	OP	1¼" FORGED HALF CPLG (3000#)	–	–	

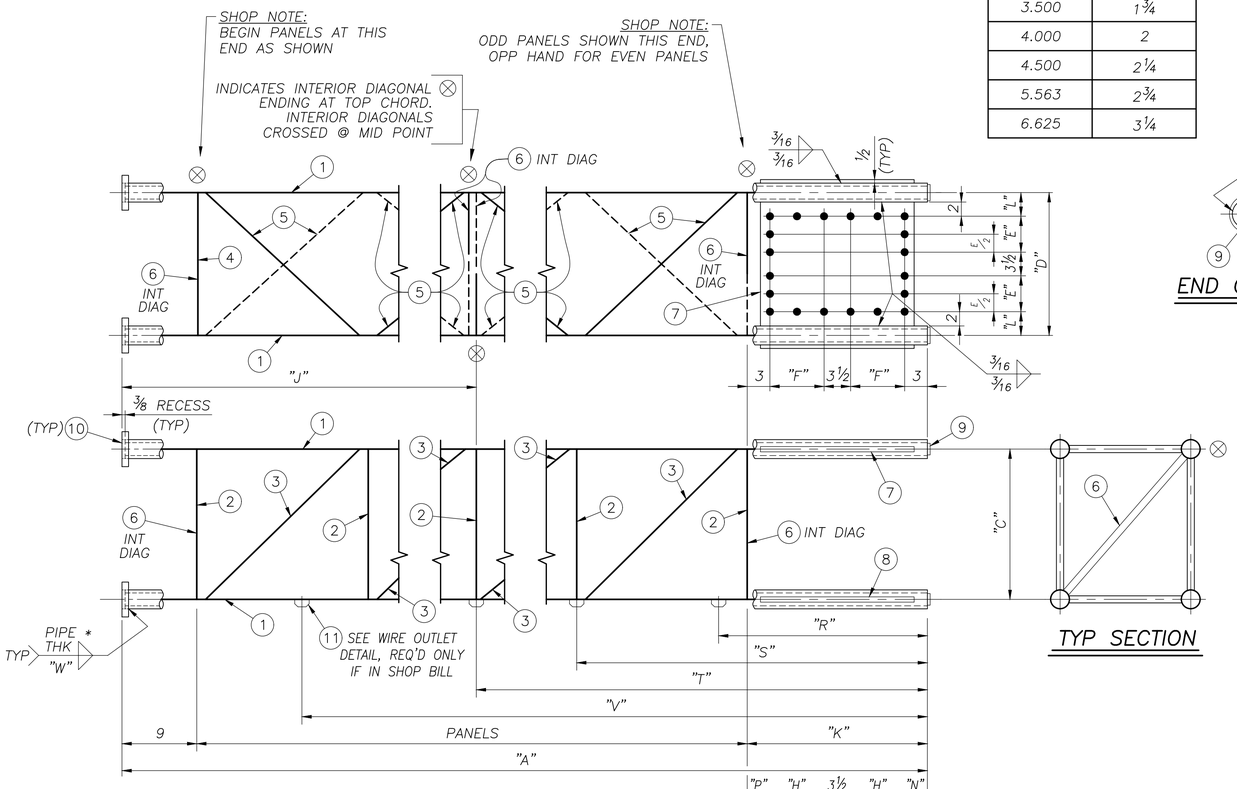

TYP SECTION

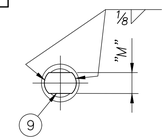

END CAP DETAIL

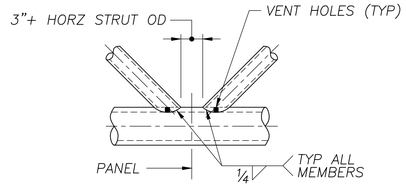

JOINT DETAIL

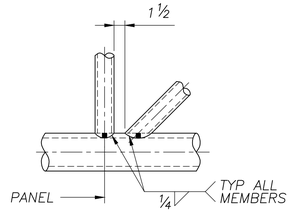

JOINT DETAIL

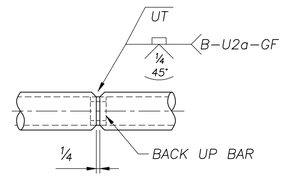

OPTIONAL CHORD SPLICE

(FOR WALL THK 5/16" OR GREATER ONLY)

*NOTE: PIPE THK –1/16" FOR PIPE WALLS > ¼"

TRUSS

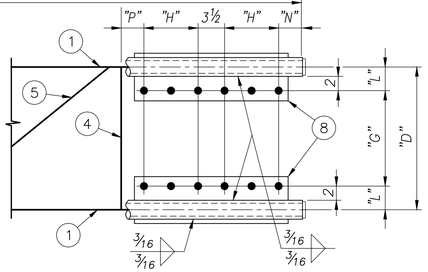

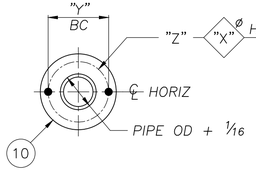

FLANGE DETAIL

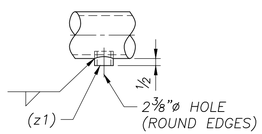

WIRE OUTLET DETAIL

SHOP NOTE: INTERIOR DIAGONALS MAY BE OFFSET UP TO 6" FROM PANEL POINTS ON TRUSS IN ORDER TO AVOID INTERSECTING WELDS IN THE AREA OF OTHER WEB MEMBERS. DO NOT OFFSET MEMBERS SO AS TO INTERFERE WITH BOLTED CONNECTIONS AT FIELD SPLICES.

NOTE: ALL HOLES TO BE Ø 7/8 UNLESS NOTED

NOTE: SEE GENERAL NOTES DRAWING FOR MATERIAL SPECIFICATIONS, FOUNDATION AND STANDARD NOTES

REF DWG: E1

AASHTO 6th Edition Spec's

OH–17

SEALED BY:

SOUTH CAROLINA PROFESSIONAL ENGINEER ROBERT R WIGINGTON No. 35290

Jul 9 2024

NO:	REVISIONS	DATE	MADE	CHECKED
1	REVISED PER SPAN CHANGE	7/3/24	DLK	JSD

walpar A valmont COMPANY
POST OFFICE BOX 28650
BIRMINGHAM ALABAMA 35228
4200 JEFFERSON AVENUE
BIRMINGHAM ALABAMA 35221
PHONE (205)–925–4990
FAX (205) 925–7273

1

CBTSDET

STATE:	South Carolina
FED PROJ:	Carolina Crossroads Phase 1 & 2
ST PROJ:	P039718
COUNTY:	Lexington & Richland
ROUTE:	I–26 & I–126
SUBJECT:	CANTILEVER SIGN SUPPORT
	DETAIL OF TRUSS
FOR:	Archer–United Joint Venture
DRAWN BY:	DLK DATE: 8/23/23
CHECKED BY:	DLJ DATE: 8/24/23
DWG NO:	C3546–5

C3546–5

NAME: E:\acad\JobsNProg\3546\3546–5.dwg DATE: JUL 03, 2024 TIME: 10:21 AM jd706288

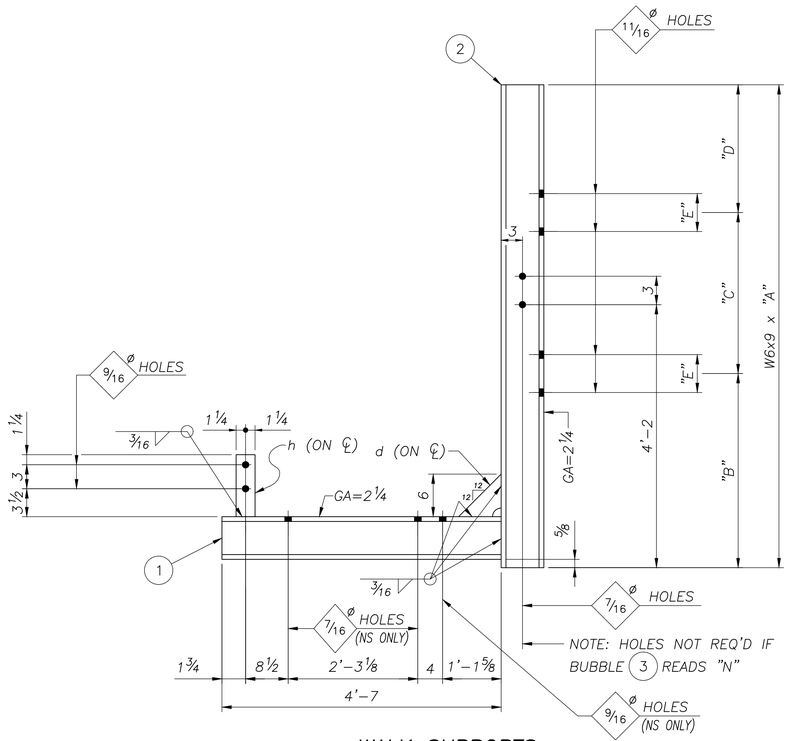

WALK SUPPORTS

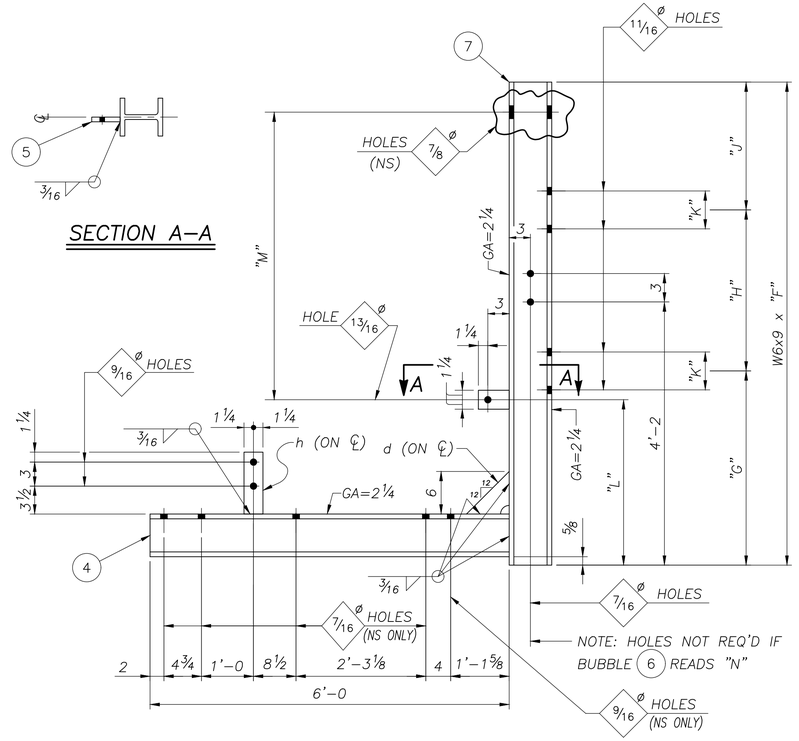

SIGN/WALK/LIGHT SUPPORTS

MARK	QTY	"A"	"B"	"C"	"D"	"E"	1	2	3
6S1	1	9'-8	5'-2	4'-0	6	4⅛	b	a	N

△2

MARK	QTY	"F"	"G"	"H"	"J"	"K"	"L"	"M"	4	5	6	7
6S2	2	9'-8	5'-2	4'-0	6	4⅛	2'-3¼	6'-5½	bb	f	Y	aa
6S3	1	9'-8	5'-2	4'-0	6	4⅛	2'-3¼	6'-5½	bb	f	N	ba

△2 △2

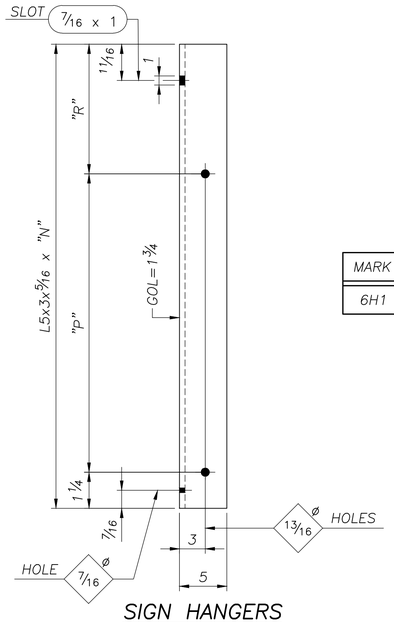

SIGN HANGERS

MARK	QTY	"N"	"P"	"R"
6H1	3	10'-0¼	6'-5½	3'-5½

△2

					C3546-6
PARTS PER CONT	PART MARK NO	NO OF PIECES REQ'D	SECTION SYM	DESCRIPTION OF MATERIAL	LENGTH FEET	LENGTH INCHES	PARTS FOR ONE UNIT	
	6S1	1		WALK SUPPORTS				
△2	a	1	W	6 x 9	9	8		
	b	1	W	6 x 9	4	7		
	d	1	PL	1/4 x 6	0	6		
	h	1	PL	1/2 x 2 1/2	0	7¾		
	6S2	2		SIGN/WALK/LIGHT SUPPORTS				
△2	aa	2	W	6 x 9	9	8		
	bb	2	W	6 x 9	6	0		
	d	2	PL	1/4 x 6	0	6		
	f	2	PL	3/8 x 2 1/2	0	4¼		
	h	2	PL	1/2 x 2 1/2	0	7¾		
	6S3	1		SIGN/WALK/LIGHT SUPPORTS				
△2	ba	1	W	6 x 9	9	8		
	bb	1	W	6 x 9	6	0		
	d	1	PL	1/4 x 6	0	6		
	f	1	PL	3/8 x 2 1/2	0	4¼		
	h	1	PL	1/2 x 2 1/2	0	7¾		
	6H1	3		SIGN HANGERS				
	k	3	L	5 x 3 x 5/16	10	0¼		

NOTE:
SEE GENERAL NOTES DRAWING FOR MATERIAL SPECIFICATIONS, FOUNDATION AND STANDARD NOTES

REF DWG: E1, WE1

OH-17

AASHTO 6th Edition Spec's

SEALED BY:



Jul 9 2024

walpar
A valmont COMPANY
POST OFFICE BOX 28650
BIRMINGHAM ALABAMA 35228
4200 JEFFERSON AVENUE
BIRMINGHAM ALABAMA 35221
PHONE (205)-925-4990
FAX (205) 925-7273

△2

STATE:	South Carolina
FED PROJ:	Carolina Crossroads Phase 1 & 2
ST PROJ:	P039718
COUNTY:	Lexington & Richland
ROUTE:	I-26 & I-126
SUBJECT:	SIGN SUPPORT SIGN HANGER DETAIL
FOR:	Archer-United Joint Venture
DRAWN BY:	DLK DATE: 8/23/23
CHECKED BY:	DLJ DATE: 8/28/23
DWG NO:	C3546-6

NO:	REVISIONS	DATE	MADE	CHECKED
△2	REVISED PER SPAN CHANGE	7/3/24	DLK	JSD

SH-DET5

NAME: E:\acad\JobsNPrg\3546\3546-6.dwg DATE: JUL 03, 2024 TIME: 10:22 AM jd706288

MARK	QTY	"B"	"C"	PANELS	"D"								"M"			"W"	"X"	"Y"	"Z"
104T1	1	9'–10¼	4'–0	2 @ 4'–2⅛(±) = 8'–4¼	3'–6								1½			¼	⅞	6½	4

MARK			1	2	3	4	5	6			9	10	
104T1			a	b	d	f	g	h			n	p	

Add wire outlet for sign light

SHOP NOTE:
ODD PANELS SHOWN THIS END, OPP HAND FOR EVEN PANELS

SHOP NOTE:
BEGIN PANELS AT THIS END AS SHOWN

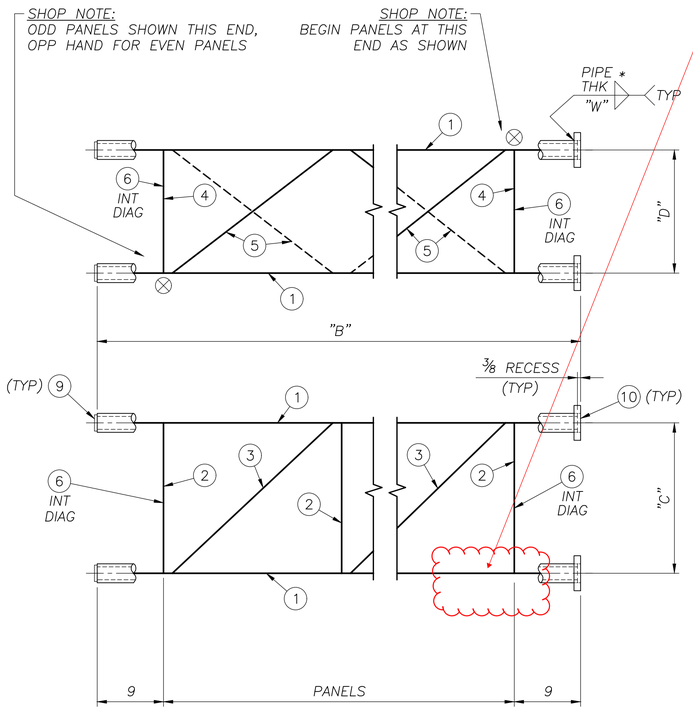

⊗ INDICATES INTERIOR DIAGONAL ENDING AT TOP CHORD

TRUSS

*NOTE: PIPE THK – 1/16" FOR PIPE WALLS > ¼"

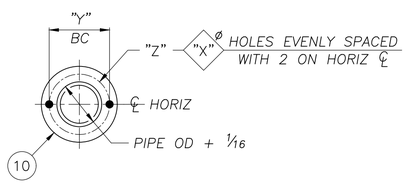

FLANGE DETAIL

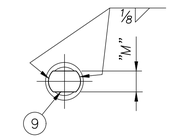

END CAP DETAIL

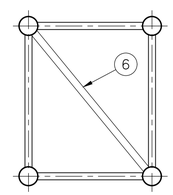

TYP SECTION

VENT HOLE SIZES	
WEB MEMBER OD	HOLE DIA ± ¼"
< 3.500	¾
3.500	1¾
4.000	2
4.500	2¼
5.563	2¾
6.625	3¼

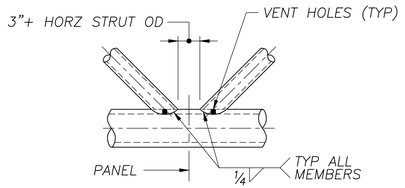

JOINT DETAIL

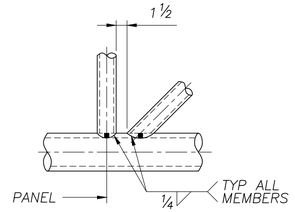

JOINT DETAIL

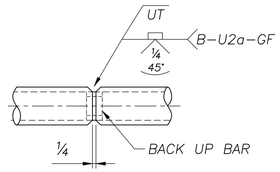

OPTIONAL CHORD SPLICE

(FOR WALL THK 5/16" OR GREATER ONLY)

SHOP NOTE:
INTERIOR DIAGONALS MAY BE OFFSET UP TO 6" FROM PANEL POINTS ON TRUSS IN ORDER TO AVOID INTERSECTING WELDS IN THE AREA OF OTHER WEB MEMBERS.
DO NOT OFFSET MEMBERS SO AS TO INTERFERE WITH BOLTED CONNECTIONS AT FIELD SPLICES.

NOTE:
SEE GENERAL NOTES DRAWING FOR MATERIAL SPECIFICATIONS, FOUNDATION AND STANDARD NOTES

REF DWG: E1

OH–17

AASHTO 6th Edition Spec's

C3546–104

PARTS PER CONT	PART MARK NO	NO OF PIECES REQ'D	SECTION SYM	DESCRIPTION OF MATERIAL	LENGTH FEET	LENGTH INCHES	PARTS FOR ONE UNIT	
	104T1	1		CANTILEVER TRUSS				
	a	4	PIPE	3.500 x .188	9	9⅞		
	b	6	PIPE	1.660 x .140	3	8 13/16		
	d	4	PIPE	1.315 x .133	5	3⅜		
	f	4	PIPE	1.660 x .140	3	2 13/16		
	g	4	PIPE	1.660 x .140	4	11 9/16		
	h	2	PIPE	1.900 x .145	5	0 1/16		
	n	4	PL	¼ x 1½	0	3¼		
	p	4	PL	¾ x 9½ DIA.	–	–		

SEALED BY:



Jul 9 2024

walpar
A valmont COMPANY

POST OFFICE BOX 28650
BIRMINGHAM ALABAMA 35228
4200 JEFFERSON AVENUE
BIRMINGHAM ALABAMA 35221
PHONE (205)–925–4990
FAX (205) 925–7273

0

STATE:	South Carolina
FED PROJ:	Carolina Crossroads Phase 1 & 2
ST PROJ:	P039718
COUNTY:	Lexington & Richland
ROUTE:	I–26 & I–126

SUBJECT: CANTILEVER SIGN SUPPORT
DETAIL OF TRUSS

FOR: Archer–United Joint Venture

DRAWN BY: DLK DATE: 6/28/24
CHECKED BY: JSD DATE: 7/3/24

DWG NO: C3546–104

NO:	REVISIONS	DATE	MADE	CHECKED
0	CHECK COMPLETE	7/3/24	DLK	JSD

CBTESDET

NAME: E:\acad\JobsNPrg\3546\3546–104.dwg DATE: JUL 03, 2024 TIME: 10:23 AM jd706288

Subject Box Truss Cantilever Design Information Sheet C1
Job No C3546 By IWL Date 5/30/24
Chk'd By RRW Date 7/8/24

1

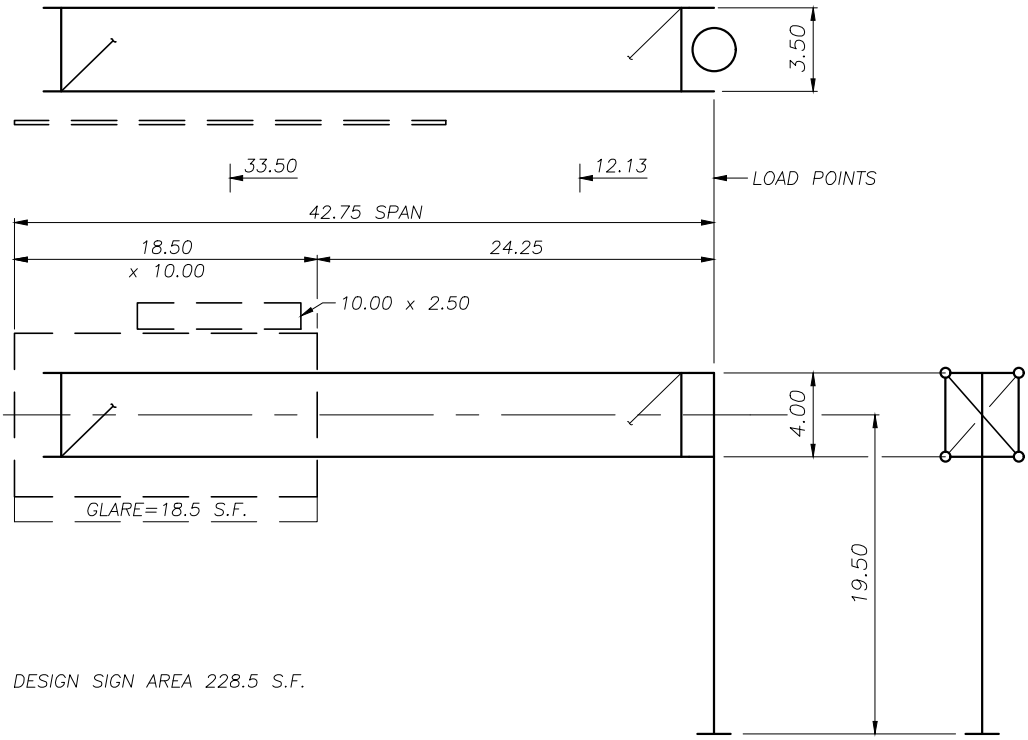

DESIGN SIGN AREA 228.5 S.F.

8 – 1.75"ø ANCHOR BOLTS

STR NO: OH–17
STA NO: 452+48.51(WB)

CHORDS	3.500 x 0.188
VERTICAL DIAGONALS	1.315 x 0.133
VERTICAL STRUTS	1.660 x 0.140
HORIZ STRUTS & DIAG'S	1.660 x 0.140
POST	30.000 x 0.375

SOUTH CAROLINA
LICENSED PROFESSIONAL ENGINEER
No. 35290
ROBERT R WIGINTON

Robert R Wiginton

Jul 9 2024

Box Truss Cantilever Structure Design

Reference Walpar Job Number : C3546
Reference Design Information Sheet Number : C1 Structure : OH-17 Station : 452+48.51(WB)
State : SC
AASHTO Specification : 6th Edition Fatigue Category : II
Design Wind Velocity (V) : 100 mph

Structure Dimensions

Span (S)	42.75 ft	Truss Hgt (U)	4.00 ft	Truss Depth (Y)	3.50 ft
Post Hgt (H)	19.50 ft	Coeff of Hgt (Kz)	0.94		

Sign Information

Actual Sign Area: 228.50 sq ft

Z Ecc to bottom of glare screen

Sign	Load (i)	Lgth (B_i)	Hgt (D_i)	Location (a_i)	Unit wgt	Depth	C_d	Z Ecc	Area	Exit Panel
1	2	18.50	10.00	33.50	7.00		1.15	6.00	228.50	X

Walkway Information

	Lgth	Location	Width	Unit wgt	Y Ecc
WW1	20.25	32.63	2.54	65	4.70
WW2					

Load Summary Estimate

Weight of truss only	2211 lbs
Weight of truss with signs	3811 lbs
Post weight †	3306 lbs

† includes additonal wgt from base plate



Jul 9 2024

1

C1 - 1 of 8

Walpar (c) 2014

Box Truss Cantilever Structure Design

Job No : C3546 Structure No : OH-17 Station : 452+48.51(WB)

Loads

Unit wind load on sign(s)/C_d: 27.43 psf Unit wind load on exposed truss: 32.92 psf Unit wgt of truss: 41.77 plf Unit ice wgt on truss: 19.73 plf

Truss Area for Wind Load (A_t): 0.87 sq ft / ft ***All loads in charts in lbs, ft or ft-lbs unless noted**

Truss Load Summary For Actual Sign & WW Condition

	Load (i)	Dead	Wind (W_p & W_h)	Ice
Sign and Truss Loads	1	1013	696	479
	2	2372	7231	1051
WW Loads	WW1	1316	407	540
Post Reaction (R_1)		4701	8334	2070
Truss Moments (M)		134694	263948	58628

** WW/Equipment Loads are incorporated into Sign and Truss Loads to determine Reactions and Moments.

Post Loads

Dead	Wind	Ice	Group II t_c	Group III t_c
3051	664	507	133	199

Load Combinations for Design Sign Area (Max Condition)

Truss Member Loads	DL	DL +WL	DL+1/2 WL+IL
Truss Chords (Pc)	16837	54544	43019
Vertical Diagonals (Pv)	7539	7539	11078
Horizontal Diagonals (Ph)	2694	6988	3892
Vertical Struts (Psv)	5213	5649	7661
Horizontal Struts (Psh)	2505	4167	3741

Serviceability Requirements

Truss DL Deflection	0.90 in.
Total DL Deflection	2.65 in.
Limit for Deflection	3.42 in.
Camber Used (Cu)	5.34 in.
Permanent Camber (Cp)	4.44 in.
Post Tilt	0.48 in.
Post Deflection Limits	6.45 in.
D^2/400 Limit	3.63 in.
Horizontal WL Deflection	3.29 in.
Horizontal Defl Limits	12.83 in.

	Post Loads					
	M_N	M_{tc}	M_z/Torsion	V_N	V_{tc}	Axial
Group II Comb. 1 (DL+WL)	174740	169783	269176	9194	1799	7752
Group III Comb. 1 (DL+1/2WL+IL)	90928	210286	134588	4695	900	10329
Group II Comb. 2 (DL+WL)	106885	185585	177062	5595	2699	7752
Group III Comb. 2 (DL+1/2WL+IL)	56747	218768	88531	2896	1350	10329



Jul 9 2024

1

C1 - 2 of 8

Walpar (c) 2014

Box Truss Cantilever Structure Design

Job No : C3546 Structure No : OH-17 Station : 452+48.51(WB)

Material Information

	Pipe Size (Min Yield)	Unbraced Lgth	CSR Group II	CSR Group III
Truss Chords	3.500 x 0.188 (52 ksi)	8.36 ft	0.89	0.71
Vertical Diagonals	1.315 x 0.133 (52 ksi)	5.78 ft	0.49	0.72
Vertical Struts	1.660 x 0.140 (52 ksi)	4.00 ft	0.36	0.49
Horizontal Diagonals	1.660 x 0.140 (52 ksi)	5.45 ft	0.78	0.43
Horizontal Struts	1.660 x 0.140 (52 ksi)	3.50 ft	0.24	0.21
Post	30.000 x 0.375 (52 ksi)	21.50 ft	0.36	0.28

Structure Input (For Foundation Designs)

Sign DL React (DLS)	2.92 k
Truss DL React (DLT)	1.79 k
Post DL React (DLP)	3.05 k
Truss WL React (Wh)	0.70 k
Truss WL React (Wp)	7.49 k
Post WL React (Wv)	0.66 k
Dist. To DLS & Wp (L1)	33.50 ft
Distance To Wh (L2)	21.38 ft
Distance To Rh (H1)	19.50 ft
Distance To Wv (H2)	10.75 ft
Torque at Base (Mt)	269.2 k-ft
Min Ped Wth (PL & PW)	4.50 ft

Structure Detail Information

Truss to Post Connection

Connection Bolt Qty & Size	8 - ¾" ø A325
Connection Plate Weld "A"	¼ fillet
Connection Plate Weld "B"	3/16 fillet
Connection Plate Welds "C"&"D"	3/16 fillet

Post Detail

Maximum Anchor Bolt Pullout	39503 lbs
Anchor Bolt Circle	36 in. Dia
Anchor Bolt Yield	55 ksi
Anchor Bolt Qty & Size	8 - 1.75" ø
Anchor Bolt Length (Embed Used)	4.50 ft (3.5 ft)
Anchor Bolt CSR	0.59
Base Plate Thickness	1.75 in.
Base Plate Weld	5/16 fillet
Gusset Plates at Base	8-¾" x 12"

Truss Chord Splices

Maximum Design Load at Splice	60814 lbs
Splice Moment (per in. of circum)	3457 in-lbs
Splice Bolt Circle	6.5 in.
Splice Bolt Qty & Size	4 - ¾" ø A325
Splice Plate Thickness	0.75 in.
Splice Plate Weld	¼ fillet

ACI 318 App D checked with Min. Req'd Embed 2.74 ft



Sign Hanger Detail

Design hanger spacing 9.00 ft

Sign Hanger U-Bolt type ASTM-A307

SIGN	Max UBL at End	Max Spacing	Hanger U-Bolt	Sign Hanger	Hanger Support
1	4.00 ft	9.00 ft	2 - ½" ø	L5x3x5/16	W6x9

Jul 9 2024

1

Walpar (c) 2014

Box Truss Cantilever Structure Design

Job No : C3546 Structure No : OH-17 Station : 452+48.51(WB)

Vibration and Fatigue (Per AASHTO 6th Edition)

Natural Wind Gust Load on Signs/C_d 4.42 psf
Natural Wind Gust Load on Truss 5.30 psf

Truck Induced Gust Load on Truss 16.37 psf
Extent of Truck Induced Gust 12.00 ft
Truss Area for Truck Induced Gust 0.86 sq ft / ft
Location of Center of Truck Induced Gust 36.75 ft

Truss Load Summary for Vibration and Fatigue

Loads (i)	NWG(i)	TIG(i)
1	112	
2	1071	169
WW1	205	561
Post Reaction	1388	731
Maximum Moments	43907	26862

Member Forces for Vibration and Fatigue

Truss Members	P_{NWG}	P_{TG}
Truss Chords	6272	3358
Vertical Diagonals	-	528
Horizontal Diagonals	1080	-
Vertical Struts	-	365
Horizontal Struts	694	-

	Post Loads at Base				
	M_N	M_Y	M_z/Torsion	V_N	Axial
Natural Wind	29866	-	43907	1649	-
Truck Induced Gust	-	26862	-	-	731

Vibration and Fatigue Stresses

	NWG (ksi)	TIG (ksi)	Allowable (ksi)
Post/Truss Connection	1.16	0.62	2.60
Truss Vertical Diagonals	-	0.74	1.20
Truss Horizontal Diagonals	1.04	-	1.20
Truss Vertical Struts	-	0.55	1.20
Truss Horizontal Struts	1.04	-	1.20
Post Base Connection	0.63	0.57	7.00
Base Stiffener Termination	1.41	1.26	7.00
Anchor bolts	3.70	3.40	7.00



Jul 9 2024

1

Walpar (c) 2014

Box Truss Cantilever Structure Design

Job No : C3546 Structure No : OH-17 Station : 452+48.51(WB)

Foundation Design

Boring Type SPT Boring Designation G-150
Major Soil Type Cohesionless Depth to Water NA Surcharge (Frost) Depth 2 ft
Ground Slope 12:1 Consider slope stability? N

SOIL TYPES	
01-GP	07-SM
02-GW	08-ML
03-GM	09-MH
04-GC	10-SC
05-SP	11-CL
06-SW	12-CH

Soil Properties

Depth	N Value	γ' (pcf)	Φ (deg)	S_u (lbf/ft^2)	α	β	f_{SN} (lbf/ft^2)	$(N_1)_{60}$	Soil Type
**0 - 2	16	121	29	2000				32	11
2 - 8	14	107	34			1.12	630	28	07
8 - 16	10	105	31			0.69	898	15	07
16 - 21	4	102	27			0.26	444	5	07
21 - 35	4	102	26					4	07

* Soil Type 13 indicates rock layer with N>60 for cohesionless soil or N>40 for cohesive soils
**Top 2.0 ft of soil will not contribute to load resistance

Soil Bearing Capacity for Spread Footing Design

Footing width, B 10.00 ft
Footing length, L 21.00 ft
Eccentricity, e_L 1.24 ft
Eccentricity, e_B 1.25 ft
Effective ftg width, B' 7.51 ft
Effective ftg width, L' 18.53 ft

Total wgt of load, foundation and soil, Pt 134.99 k
Normal moment, ML 166.81 ft-k
Transverse moment, Mw 168.19 ft-k
Distance from ground to bottom of footing, d_{min} 4.33 ft
Distance from ground to bottom of footing, D_f 4.75 ft
Distance to ground water from bottom of ftg, z_w
Overburden pressure at base of footing, q 0.50 ksf
Weighted average soil unit weight, γ 106 pcf

Ultimate bearing capacity, q_{ult} 31.16 ksf
Allowable Bearing Capacity 10.25 ksf
Bearing Capacity used *** 2.00 ksf

***Note: Bearing capacities greater than 4.0 ksf will rarely effect spread footing pad size



Jul 9 2024

1

C1 - 5 of 8

Walpar (c) 2014

Box Truss Cantilever Structure Design

Job No : C3546 Structure No : OH-17 Station : 452+48.51(WB)

Cantilever Spread Footing Design

Material/Soil Specifications and Safety Factors

Concrete f'_c :	3000 psi	Concrete wgt :	150 pcf
Rebar yield f_y :	60000 psi	Rebar F_s :	24000 psi
Soil Bearing Capacity :	2000 psf	Soil unit wgt :	110 pcf

Load Safety Factor[1] : 1.15

Loads and Locations From Structure

Sign DL React (DLS)	2.92 k	Distance to DLS & Wp (L1)	33.50 ft
Truss DL React (DLT)	1.79 k	Distance to Wh (L2)	21.38 ft
Post DL React (DLP)	3.05 k	Distance to Rh (H1)	19.50 ft
Truss WL React (Wh)	0.70 k	Distance to Wv (H2)	10.75 ft
Truss WL React (Wp)	7.49 k	Torque at Base (M_t)	269.2 ft-k
Post WL React (Wv)	0.66 k	Min Ped Width (PL/PW)	4.50 ft

Loads at Top of Pedestal from Structure

Axial load (P)	7.75 k		
Moment (ML)	166.81 ft-k	Moment (Mw)	168.19 ft-k
Shear (VL)	8.85 k	Shear (Vw)	1.72 k

Final Spread Footing Design Sizes

Pad Length (L)	21.00 ft	Pedestal Width/Length	4.50 ft (PW/PL)
Pad Width (W)	10.00 ft	Pedestal Projection	0.75 ft (PE)
Pad Thickness (T)	1.50 ft	Ground line to Top of Pad	3.25 ft (PT)

Reinforcement

Pad	Pedestal
Top Each Way - #4 Bars @ 12" o.c.	40 - #8 Vertical Bars Equally Spaced
X Direction - 10 - #6 Bars @ 12" o.c.	5 - #5 Ties @ 10.25" o.c.
Y Direction - 21 - #4 Bars @ 12" o.c.	

Serviceability	Quantities
1.93% of footing in uplift	1459 lbs of reinforcement
Safety factor against overturning = 21.29	14.67 cyd of concrete

Uncracked Section Calculations

Wgt of soil above pad (Ps)	67.84 k		
Wgt of concrete (Pc)	59.40 k	Total Area (A)	210.00 ft²
Total Load (Pt)	134.99 k		
X	10.50 ft	Y	5.00 ft
Ix	1750.00 ft⁴	Iy	7717.50 ft⁴
Mx	204.28 k-ft	My	247.82 k-ft

Corner Stresses [Factored loads[1] (unfactored loads)]

F1	1.56 ksf (1.44 ksf)
F2	0.40 ksf (0.43 ksf)
F3	-0.28 ksf (-0.16 ksf)
F4	0.89 ksf (0.86 ksf)

Cracked Section Calculations [Factored loads[1] (unfactored loads)]

A1	125.22 ft² (155.74 ft²)	L1	12.52 ft (15.57 ft)	W1	10.00 ft (10.00 ft)
A2	64.99 ft² (46.15 ft²)	L2	8.48 ft (5.43 ft)	W2	7.67 ft (8.51 ft)
A3	9.89 ft² (4.05 ft²)	L3	8.48 ft (5.43 ft)	W3	2.33 ft (1.49 ft)
A'	200.11 ft² (205.95 ft²)				
Xc	0.38 ft (0.17 ft)	X1	4.24 ft (2.71 ft)	Y1	0.00 ft (0.00 ft)
Yc	0.21 ft (0.09 ft)	X2	-6.26 ft (-7.79 ft)	Y2	1.17 ft (0.75 ft)
		X3	-4.85 ft (-6.88 ft)	Y3	-3.44 ft (-4.00 ft)
Ixc	1541.84 ft⁴ (1661.31 ft⁴)				
Iyc	7086.65 ft⁴ (7403.03 ft⁴)				
Ixcyc	-330.96 ft⁴ (-160.83 ft⁴)				
Mxc	176.10 ft-k (165.67 ft-k)				
Myc	196.61 ft-k (192.40 ft-k)				
X'	10.88 ft (10.67 ft)				
Y'	5.21 ft (5.09 ft)				

Corner Stresses [Factored loads[1] (unfactored loads)]

F1	1.63 ksf (1.46 ksf)
F2	0.42 ksf (0.44 ksf)
F3	-0.28 ksf (-0.15 ksf)
F4	0.93 ksf (0.87 ksf)



Jul 9 2024

1

Walpar (c) 2014

Box Truss Cantilever Structure Design

Job No : C3546 Structure No : OH-17 Station : 452+48.51(WB)

Cantilever Spread Footing Design (cont.)

Moment and Shear Calculation Results

L_{x1}	5.00 ft	W_{x1}	0.00 ft	S_{y1}	0.84 ksf	S_{x1}	1.28 ksf
L_{x2}	3.42 ft	W_{x2}	1.58 ft	S_{y2}	0.79 ksf	S_{x2}	1.09 ksf
L_{y1}	5.50 ft	W_{y1}	5.00 ft	S_{y3}	0.75 ksf	S_{x3}	0.95 ksf
L_{y2}	1.58 ft	W_{y2}	3.42 ft	Pcs	0.58 ksf		
				DTS_y	3.28 k	DTS_x	1.18 k
				M_{YY}	11.95 ft-k	M_{XX}	2.22 ft-k

Reinforcement Calculations

f_{cr} : 1596 psi v_{cr} : 69 psi n : 9.29

b : 12.00 in d : 14.00 in x : 5.25 in

About Y Axis		About X Axis	
p :	0.0022	p :	0.0018
k :	0.18	k :	0.17
j :	0.94	j :	0.94
f_{ca} :	713 psi	f_{ca} :	144 psi
v_{ca} :	21 psi	v_{ca} :	7 psi
Mt :	261757 in-lb	Mt :	48698 in-lb
ld_r :	39.91 in	ld_r :	20.71 in
ld_a :	96.00 in	ld_a :	30.00 in
ld_{min} :	41.08 in	ld_{min} :	27.39 in
A_{sr} :	0.34 in²	A_{sr} :	0.06 in²
A_s Used :	0.44 in²	A_s Used :	0.20 in²

Torque Calculations

P_1 :	31.50 k	P_{1P} :	14.63 k
P_2 :	15.00 k	P_{2P} :	14.63 k
TQ_m :	314.38 ft-k	T_u :	292.89 ft-k
TQ_a :	269.18 ft-k	T_{uo} :	135.58 ft-k
		A_{lr} :	5.81 in²
		A_{la} :	6.32 in²

Factor of safety against sliding (μ=0.40) : 6.10

Pedestal Calculations

V_1 : 9017 lbs V_2 : 140439 lbs V_t : 149457 lbs

About Y Axis		About X Axis	
C_x :	27.00 in	C_y :	27.00 in
G_x :	46.00 in	G_y :	46.00 in
f_a :	2.66 psi	fa :	4730 psi
F_a :	1596 psi	Fa :	26334 psi
f_{bx} :	65 psi	f_{by} :	75 psi
F_{bx} :	1596 psi	F_{by} :	1596 psi
M_x :	175060 ft-lb	M_y :	202219 ft-lb
M_{ox} :	869980 ft-lb	M_{oy} :	869980 ft-lb
I_x :	874216 in⁴	I_y :	874216 in⁴
A_g :	2916 in²	A_{sm} :	29.16 in²
A_{st} :	25.28 in²	A_s :	7.11 in²
QTY :	40	A_b :	0.79 in²
CSR :	0.12	CSM :	0.43



Jul 9 2024

1

C1 - 7 of 8

Walpar (c) 2014

Box Truss Cantilever Structure Design

Job No : C3546 Structure No : OH-17 Station : 452+48.51(WB)

Cantilever Cylindrical Footing Design

Material/Soil Specifications and Safety Factors

Concrete f '$_c$:	3000 psi	Concrete wgt :	150 pcf
Rebar yield f_y :	60000 psi	Min safety factor for torsion :	1.13
Reinforcement Clear :	4 in	Min safety factor for lateral load :	2.86

Loads and Locations From Structure

Sign DL React (DLS)	2.92 k	Dist. To DLS & Wp (L1)	33.50 ft
Truss DL React (DLT)	1.79 k	Distance To Wh (L2)	21.38 ft
Post DL React (DLP)	3.05 k	Distance To Rh (H1)	19.50 ft
Truss WL React (Wh)	0.70 k	Distance To Wv (H2)	10.75 ft
Truss WL React (Wp)	7.49 k	Footing Projection (H3)	0.75 ft
Post WL React (Wv)	0.66 k	Torque at Base (M_t)	269.2 ft-k

Loads at Top of Cylinder from Structure

Dead Load Moment (MDL)	170.37 ft-k	Effective height (Heff)	18.84 ft
Wind Load Moment (MWL)	166.81 ft-k	Lateral load from MDL (PDL)	1.77 k
Resultant Moment (MR)	242.83 ft-k	Resultant Lateral Load (PRL)	12.89 k
Wind Load Shear at Base (PWL)	8.85 k	Total Dead Load at Column Base (TDL)	7.75 k
Transverse Load (t_c)	1.77 k		

Final Cylindrical Footing Design Sizes

Req'd A_s	8.67 in²	Rebar Cage Dia (D1)	43.48 in
1% Cyl Area Min A_m	22.90 in²	Vertical bar spacing	7.19 in
Reinf Area Provided A_p	24.13 in²		

USE 54 in DIA x 17'-0 CYLINDER
w/ 19- # 10 VERT. BARS & 19 - #5 HOOPS
Extra Hoop 3 inches below top hoop

Serviceability

Calculated torsional / axial safety factors = 1.47 / 4.82
Calculated lateral safety factor = 8.74

Quantities

1601 lbs of reinforcement
10.01 cyd of concrete

Torsion Calculation Results (from Beta Method)

Cylinder Embedment	16.25 ft
Axial load	7.75 k
Torsional load	269.18 ft-k
Weight of shaft	40.56 k
Max Allow Torque on reinf CYL	418.62 ft-k
Side Resist. Capacity	156.6 k
Allowable side resist. torque	352.32 ft-k
N for Tip Rresist. (BPF)	4.00
Tip Resist. Capacity	76.34 k
Allowable Tip Resist. Torque	43.9 ft-k
	0.0 ft-k
Total Allowable Torque	396.3 ft-k
Calc'd Torsional safety factor	1.47

Lateral Load Calculation Results (from Brom's Method)

Soil friction angle Φ	30.4 deg
Soil unit weight γ	106 pcf
AVG $(N_1)_{60}$ over req'd dp (BPF)	20
Lateral load from structure	12.9 k
Moment from structure	242.8 ft-k
Rankine Passive Pressure Coeff. K_P	2.58
Ultimate soil resistance P_{ult}	155 k
Allowable soil resistance P_{max}	72 k
Ultimate soil mom cap M_{ult}	2631 ft-k
Allowable soil mom cap M_{max}	1223 ft-k
Ground line moment	252 ft-k
Dist GL to 0 shear pt in CYL	4.65 ft
Maximum moment in shaft	301 ft-k



Jul 9 2024

1

C1 - 8 of 8

Walpar (c) 2014